Foundation Tier

25 Starter Questions

In addition to solving the questions students should be challenged to produce a similar question of their own

Question 1

Mark is organising a trip for his running club.
He hires a coach which normally costs £400.
The coach firm gives a discount of 10% on this amount.
Mark shares the cost equally between the 30 members of the club.

How much does each member pay?
You **must** show your working.

Question 2

There are 600 people at a conference.

$\frac{1}{4}$ of the people meet in Conference Room 1.

$\frac{1}{3}$ of the people meet in Conference Room 2.

The rest meet in Conference Room 3.

How many people meet in Conference Room 3?

Which of these fractions is closest to $\frac{1}{4}$?

You **must** show your working.

$\frac{2}{5}$ $\frac{3}{10}$ $\frac{7}{20}$ $\frac{13}{40}$

Question 3

A function diagram produce algebraic expressions.
For example

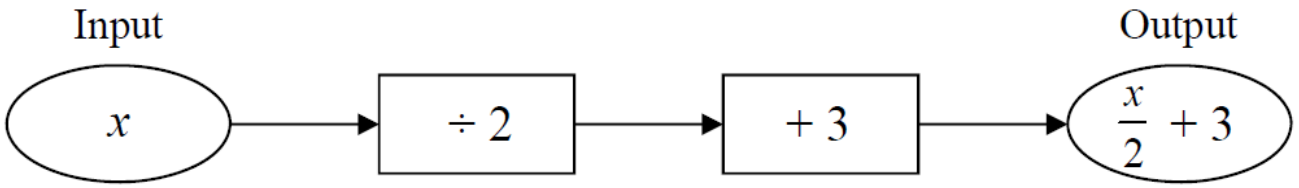

(a) Fill in the missing expression in this function diagram.

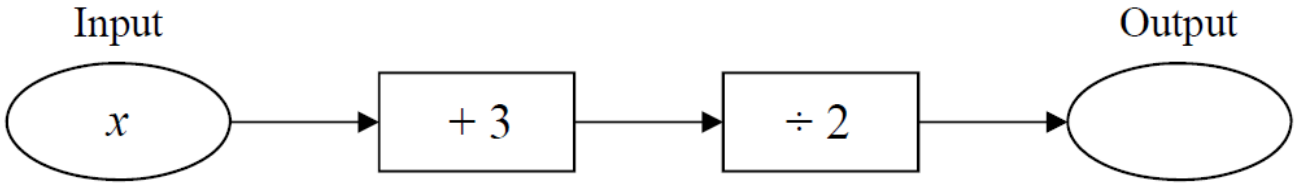

(b) Fill in the missing operations in this function diagram.

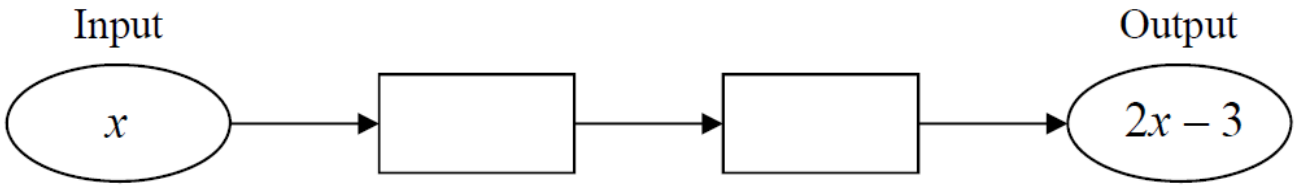

Question 4

Leah, Chloe and Maya share £400 between them.
Leah receives the smallest amount of £90
The ratio of Leah's share to Chloe's share is 2 : 3

Work out how much Maya receives.

Question 5

A sequence starts

49 46 43 40

Write down the next two terms.

What is the rule for continuing the sequence?

Answer .....

Another sequence starts

57 50 43 36

This sequence is continued.

What is the first negative number in this sequence?

The first sequence is also continued.
The two sequences have the number 43 in common.

What is the next number that the two sequences have in common?

Question 6

Use trial and improvement to complete the table to find a solution to the equation

$$x^3 - 2x = 90$$

Give your answer to 1 decimal place.

x	$x^3 - 2x$	Comment
4	56	Too low
5	115	Too high

Question 7

George wants to buy a new television.
He sees the same television on special offer at two different stores.

Teleworld

40% off

Normal price £480

SuperSave

$\frac{1}{3}$ off

Normal price £420

Which store sells the television more cheaply?
You **must** show your working.

Question 8

(i) Calculate 7.2^2

.....

Answer .....

(ii) Calculate $\sqrt{7.2}$

.....

Answer .....

(iii) Calculate 7.2^3

.....

Answer .....

(iv) Calculate the cube root of 7.2

.....

Answer .....

Calculate the reciprocal of 0.2

Question 9

p is a prime number.

Is the expression $p^2 + 6$ always even, always odd or could it be either odd or even?

Tick the correct box

☐ Always even ☐ Always odd ☐ Could be either odd or even

n and p are **both** prime numbers.

Work out values of n and p so that

$$n = p^2 + 6$$

Rearrange the formula $n = p^2 + 6$ to make p the subject.

Question 10

The cost for one person to go to a concert is made up of three parts

travel + meals + ticket

Four people share a car to go to a concert.
They pay £20 each for the travel costs.
The meals are a set price of £12.50 for each person.
The table shows some of the costs.

	Cost for 1 person (£)	**Cost for 4 people (£)**
Travel	20	80
Meals	12.50	
Ticket		
Total		242

Work out the cost of one ticket.

Question 11

ABCD is a square.

PQRS is an oblong.

Not drawn accurately

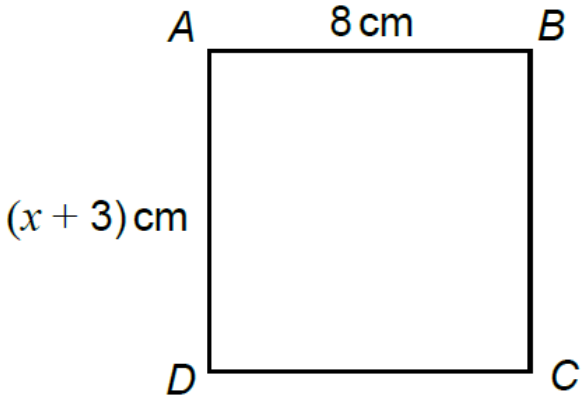

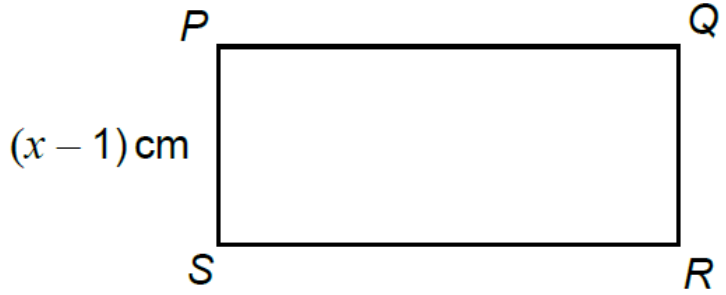

The oblong and the square have the same perimeter.

Work out the length of *PQ*.

Show clearly how you work out your answer.

Question 12

Not drawn accurately

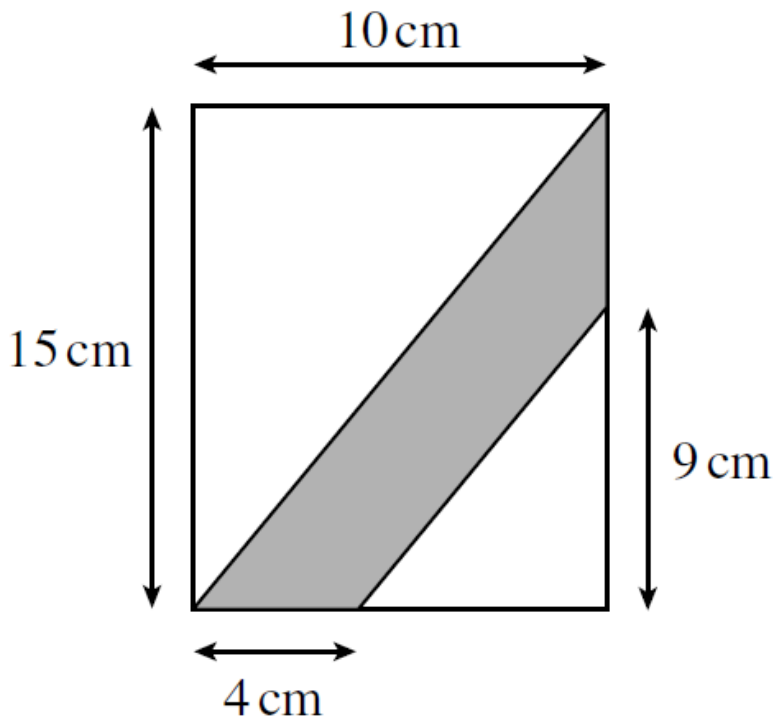

Calculate the area of the shaded shape.
State the units of your answer.
You **must** show your working.

Question 13

A water meter at a house records the volume of water used, in cubic metres.
The meter readings at the start and end of a 3 month period are as follows.

	Reading in cubic metres
End	4205
Start	4154

Water costs 104p per cubic metre.

Find the cost of the water used in this period.
Give your answer in pounds.

Question 14

The shape is a drawing of a house.

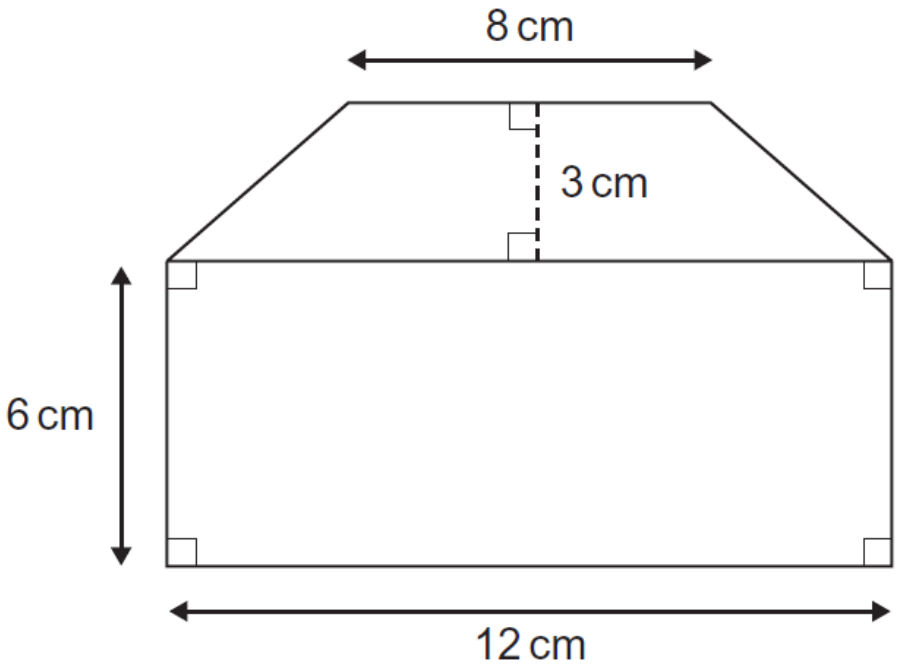

Not drawn accurately

Work out the area of this shape.
State the units of your answer.

Question 15

John owns a camera shop.
He buys 25 cameras for £60 each.
He sells the cameras for a total of £2000

How much profit does he make?
You **must** show all your working.

Question 16

A ladder of length 5 m rests against a wall.
The foot of the ladder is 1.7 m from the base of the wall.

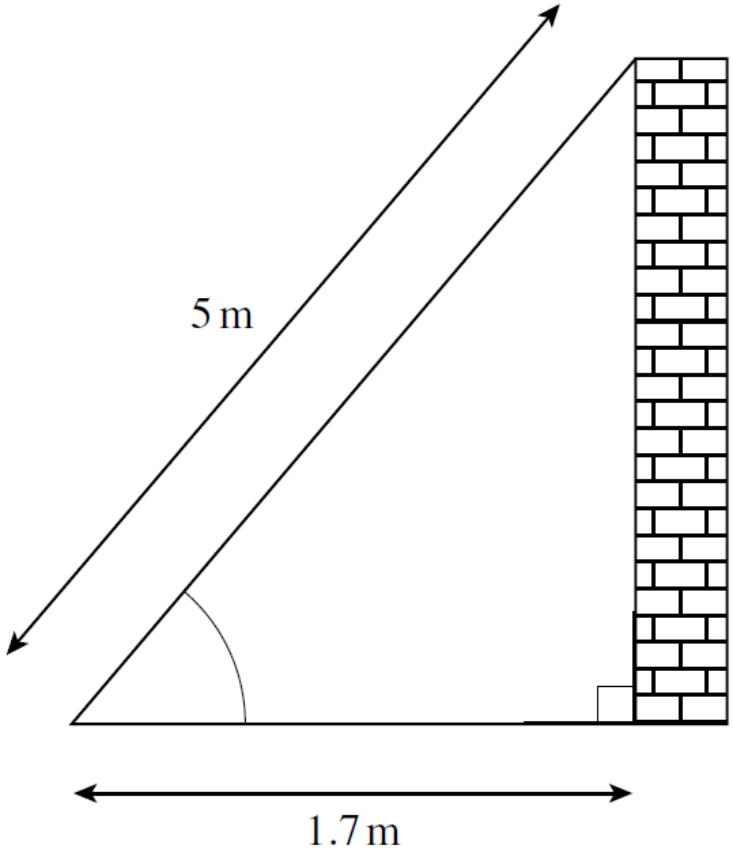

Not drawn accurately

How far up the wall does the ladder reach?

Question 17

Paul is making a fence in his garden.
Each panel of the fence needs a post at each end.
For example, here is a four-panel fence made with five posts.

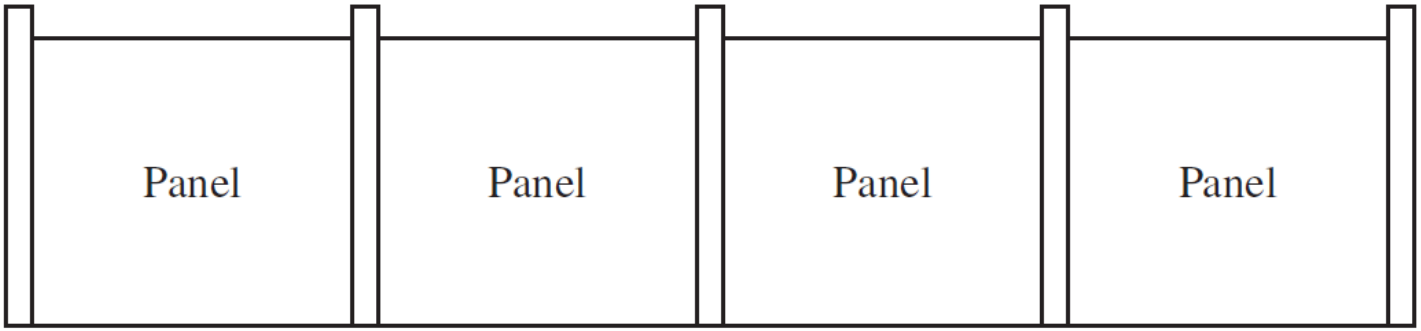

Each post costs £3.20
Each panel costs £14.80

How much does a four-panel fence cost?

Another fence costs a total of £111.20

How many panels are there in this fence?

Question 18

The lines AB and CD are parallel.

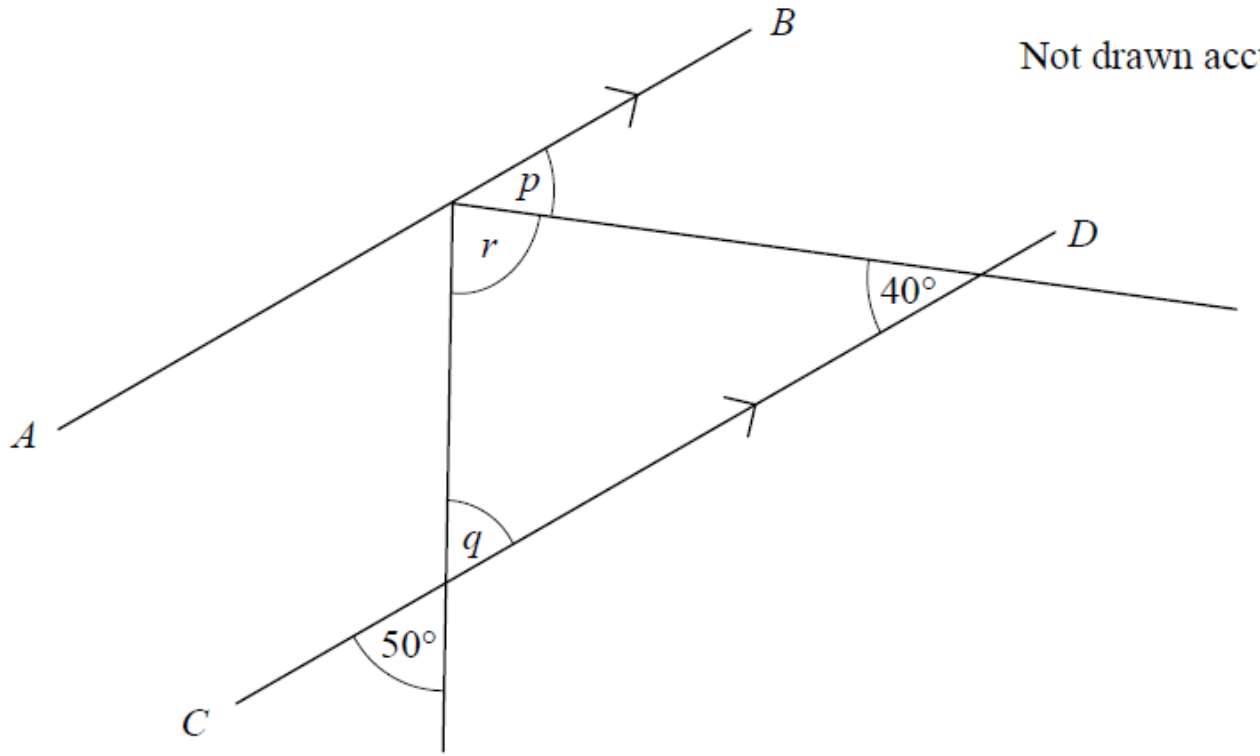

Find the values of p, q and r and give clear reasoning

Question 19

Two drivers measure the petrol consumption of their cars.

Alice's car travels 580 kilometres on a full tank of 51 litres.
Beryl's car travels 370 kilometres on a full tank of 32 litres.

Whose car travels more kilometres to the litre?
You **must** show your working.

Question 20

Round the number 6.518 to one decimal place.

Answer .....

Round the number 6.518 to two decimal places.

Answer .....

Write down the value of 10^2

Answer .....

Write down the value of $\sqrt{144}$

Answer .....

Tom says that 6 is a cube number because $2^3 = 6$

Why is Tom wrong?

Question 21

ABCDEFGH is a regular octagon.

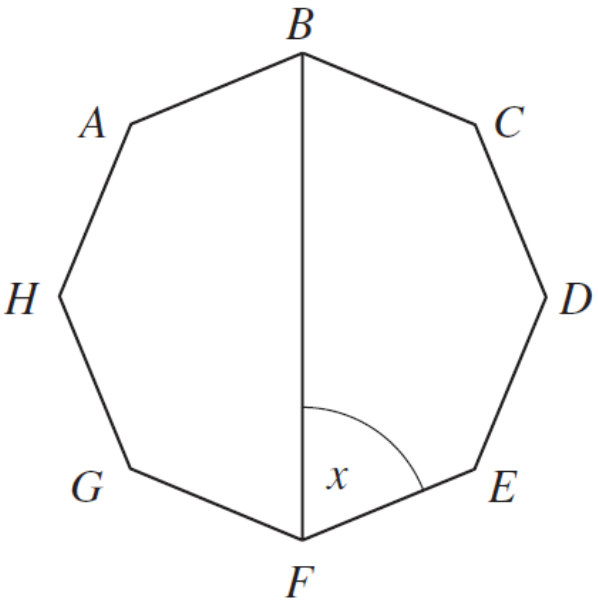

Not drawn accurately

Work out the value of x.

Question 22

The table shows information about two types of light bulbs, Standard and Energy Saving. Both types of light bulb give out the same amount of light.

	Standard	**Energy Saving**
A = Cost of bulb (pounds)	£0.50	£3.50
B = Power of bulb (kilowatts)	0.1 kW	0.02 kW
C = Expected lifetime of bulb (hours)	1500 h	12 000 h
D = Cost per kilowatt hour (pounds)	£0.10	£0.10

The total cost for a light bulb over its expected lifetime is given by the formula

$$\text{Total cost} = A + B \times C \times D$$

Find the total cost, in pounds, of a Standard bulb over its expected lifetime.

The expected lifetimes of Standard bulbs to Energy Saving bulbs are in the ratio 1500 : 12 000

Write the ratio 1500 : 12 000 in its simplest form.

One Energy Saving bulb has an expected lifetime of 12 000 hours.
How much cheaper would it be, in terms of total cost, to use one Energy Saving bulb rather than Standard bulbs?

Question 23

An item is bought for £26 and sold for a 34% profit.

What is the selling price?

Share £47 between Adam and Beth so that Adam gets four times as much as Beth.

A car is worth £15 000 at the start of 2008.
It decreases in value each year by 20% of its value at the start of the year.

How much will the car be worth at the start of 2010?

The size of a detergent bottle is increased from 500 ml to 665 ml.

What is the percentage increase?

Question 24

The bar chart shows a breakdown of the population of Hayville.

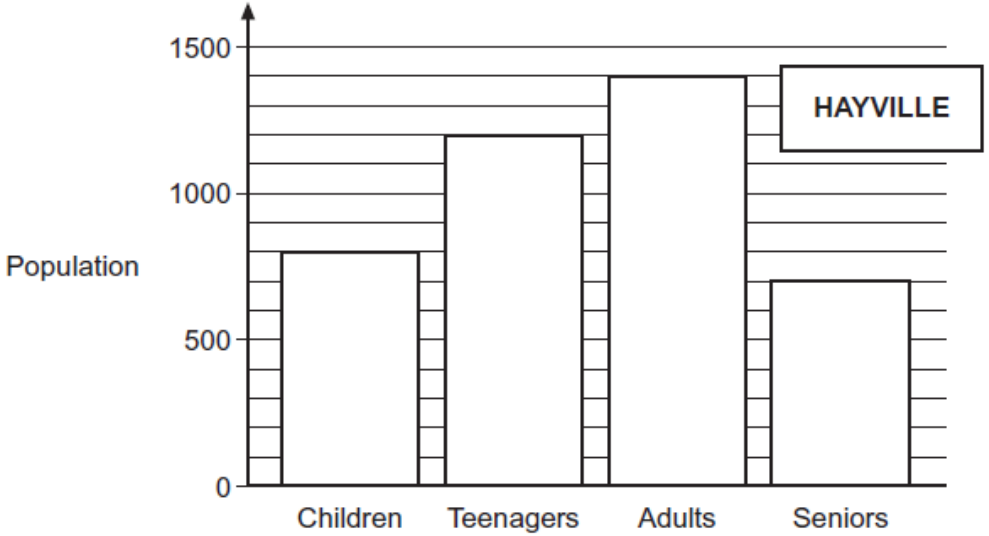

The pie chart shows the proportions of the same groups in Deetown

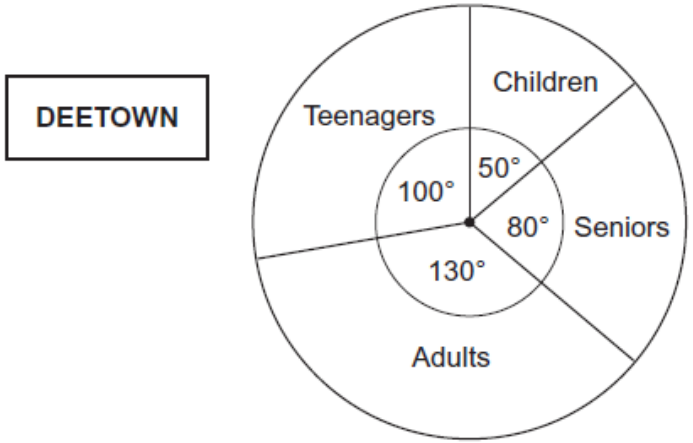

There are twice as many people in Deetown as Hayville.

Work out the number of people in Deetown who are Adults.

Question 25

Solve the equation $3(z - 2) = 27$

Expand $3(x + 2)$

Factorise $6a - 10$

Solve $\frac{w}{5} = 11$

Solve $3(2m - 1) = 21$

Expand and simplify $2(x-4) + 3(2x + 5)$

Solve the inequality $3x + 1 \geqslant 7$